Isolated DMX Merger

DMR42F	4 Channels Front access
DMR42R	4 Channels Rear access

CE

The DMR42 provides 2 optical isolated DMX outputs to protect the control console from being damaged by the high voltage feedback from the faulty dimmer channels. DMR42 can connect max 4 consoles and provides a simple means of backup for the connected consoles, either fully redundant backup or simple scene store and playback in case of main console failure during operation.

DMR42R

DMR42F

FRONT VIEW

REAR VIEW

Ordering Information

DMR42F	B130
DMR42R	U360

W1 / W2	H	D1 / D2
484 /435 mm	44 mm	275 /250 mm

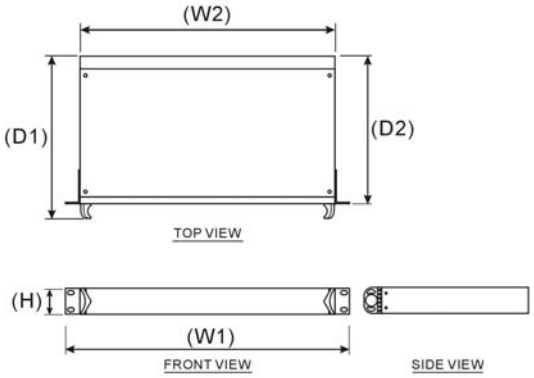

Mechanical Data

Construction	Rigid aluminium alloy extrusion front panel, Chassis made of steel sheet construction.
Paint / finish	Black anodized front panel, steel chassis coated with black epoxy-polyester powder paint.
Mounting	19", 1U standard rack mounting, detachable mounting brackets.
Handle	Rigid engineering plastic handles.

Electrical Data

Power input	100~240VAC / 0.8Amp
Frequency	50Hz ~ 60 Hz
DMX input	XLR 5-pin male input & XLR 5-pin female loop-out x 4 pairs
DMX output	XLR 5-pin female x2

Operation Data

Input Signal	USITT DMX512
Output Signal	USITT DMX512
Function keys	10-digit dip-switch
Input DMX signal loss	Last scene hold / Clear / Idle
Merger modes	HT Precedence / LT Precedence / Priority
Reset	By local button
LED status indicators	Red=power / Green=system / Amber=signals

Environmental Data

Operation humidity	5~95% non-condensing
Operation temperature	0~40℃ (32~104℉)

Physical Data

Model	DMR42F	DMR42R
Net weight	3.1 kg	3.1 kg
Gross weight	3.9 kg	3.9 kg
Packing size (mm)	W / D / H 590*410*140	W / D / H 590*410*140

Macostar reserves the right to change the specification without prior notice
Macostar International Ltd: Match - DMR42 - DATA - V1.5– 08 Mar 2010

Isolated DMX Distribution Amplifier

IDA 6 series — 1x Input and 6x Outputs
IDA12 series — 1x Input and 12x Outputs

CE

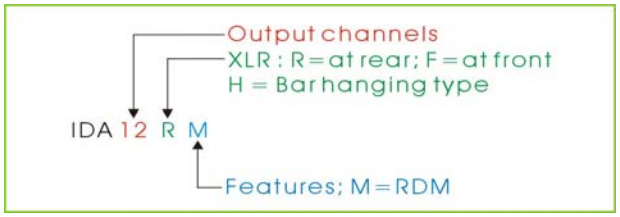

IDA 6F

IDA 12F

IDA 6R

IDA 12R

W1 / W2	H	D1 / D2
484 /435 mm	44 mm	275 /250 mm

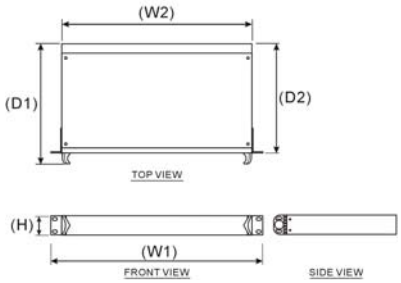

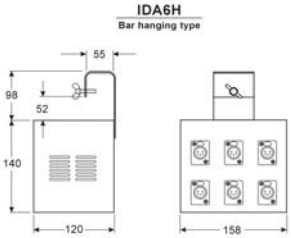

The IDA is a 6 or 12 ways opto-isolated DMX distribution amplifier amplifies the DMX signal and every output can carry 32 devices in daisy-chain connection. The built-in signal LED can show the DMX signal healthiness at particular

Mechanical Data

Construction	Rigid aluminium alloy extrusion front panel, Chassis made of steel sheet construction.
Paint / finish	Black anodized front panel, steel chassis coated with black epoxy-polyester powder paint.
Mounting	19", 1U standard rack mounting, detachable mounting brackets.
Handle	Engineering plastic handles.

Electrical Data

Model	IDA6 series	IDA12 series
Power input	100~240VAC / 0.8Amp	100~240VAC / 0.8Amp
Frequency	47Hz ~ 63 Hz	47Hz ~ 63 Hz
DMX input	XLR 5-pin male input & XLR 5-pin female loop-out	XLR 5-pin male input & XLR 5-pin female loop-out
DMX output	XLR 5-pin female x 6	XLR 5-pin female x 12
Channel protection	Opto-isolated input	Opto-isolated input
Transient Immunity	Logic high 200V/μs Logic low -500V/μs	Logic high 200V/μs Logic low -500V/μs

Operation Data

Input Signal	USITT DMX512-A; models~M: DMX512-A +RDM
Output Signal	USITT DMX512-A; models~M: DMX512-A +RDM
LED status indicators	Red=power / Green=signals

Environmental Data

Operation humidity	5~95% non-condensing
Operation temperature	0~40℃ (32~104℉)

Ordering Information

IDA 6F	B710
IDA 6FM	B7A0
IDA 6R	B720
IDA 6RM	B7G0
IDA 6H	B730
IDA 12F	B7C0
IDA 12R	CE70

Standards

CE LVD directives	EN60439-1; EN60439-2; EN60950-1
CE EMC directives	EN61000-6-3 (superseded EN50081-1:1992) EN61000-6-1 (superseded EN50082-1:1997) EN55014-1; EN55015:2006+A1; IEC 61000-2-2

Physical Data

Model	IDA 6	IDA 12	IDA 6H
Net weight	3.0 kg	3.1 kg	2.4 kg
Gloss weight	3.8 kg	3.9 kg	3kg
Packing size	W / D / H 590*410*140	W / D / H 590*410*140	W / D / H 374*320*193

Macostar reserves the right to change the specification without prior notice.
Macostar International Ltd: MATCH-IDA- DATA - V1.6 -27 Jun 2011

Isolated DMX Ports

iDIP-1	Isolated DMX Input Port, 1 Universe
iDOP-1	Isolated DMX Output Port, 1 Universe

CE

The Match series Isolated DMX Ports are designed for easy connection of any DMX devices into theatrical or TV DMX lighting system. They are compatible with any standard DMX devices, ranging from lighting control console, moving light to simple smoke machine. They provide isolated and amplified DMX signal for connected devices. Built-in indicator LED lights provide easy trouble-shooting on DMX signal routing problem.

iDIP-1

Isolated DMX Input Port, 1 Universe

iDOP-1

Isolated DMX Output Port, 1 Universe

Mechanical Data

Construction	Standard 1 gang (85x85mm) wall panel made of cold pressed forming stainless steel plate.
Finish	Natural steel color

Electrical Data

Power input	12VDC, 100mA
DMX signal	Input / output, optical isolated 2500VRMS, full 512 channels
DMX channel	USITT DMX 512-A
Connector	XLR 5-pin male (iDIP-1); XLR 5-pin female (iDOP-1)
Terminal	3.5mm pluggable terminals

Operation Data

Red LED power indicator	ON when 12VDC present
Red / green LED signal indicator (iDIP-1)	Red flashes when DMX bus occupied by others; Green flashes when console plug in with DMX sending; OFF when no DMX signal in the DMX bus.
Green LED signal indicator (iDOP-1)	Flashes when DMX present

Installation Data

Back box	Suitable for standard BS 4662 Back box
Connection	Daisy chain connection for both signal and power
Mixed connection	Max 32 iDIP-1 & iDOP-1can be connected in the same run

Environmental Data

Operation humidity	5-95% non-condensing
Operation temperature	0-40℃ (32-104℉)

Physical Data

Model	iDIP-1	iDOP-1
Size	H85*W85*D40	H85*W85*D40
Net weight	0.15 kg	0.15 kg
Gross weight	0.2 kg	0.2 kg
Packing size	Bulk pack, each in a plastic bag	

Ordering Information

Model	Ordering number
iDIP-1	B7J0
iDOP-1	B7H0

iDIP-1 installation diagram with DPC

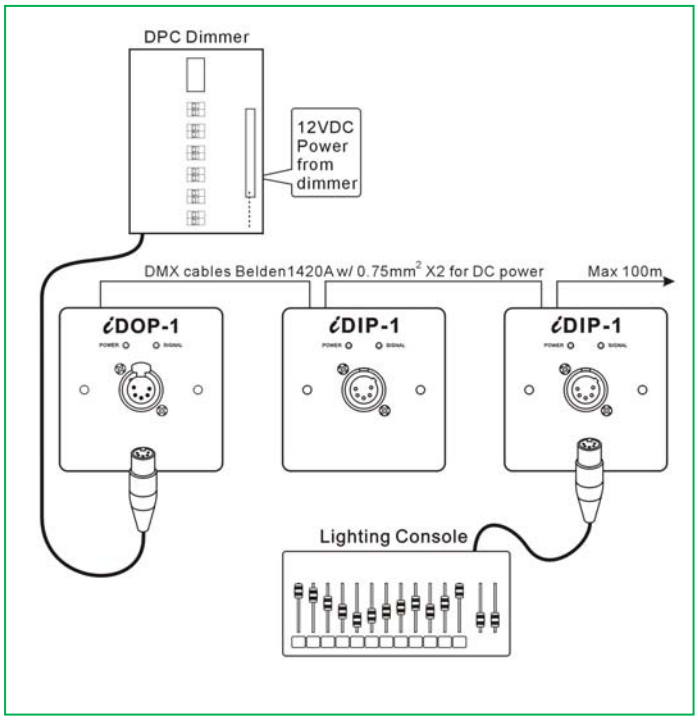

iDIP-1 installation diagram with MARS

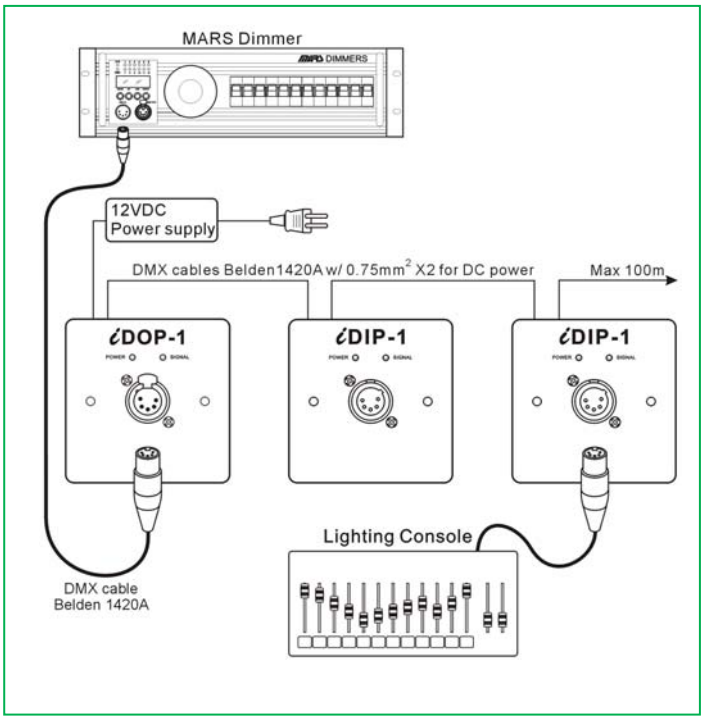

iDIP / iDOP-1 installation diagram with IDA/P DMX

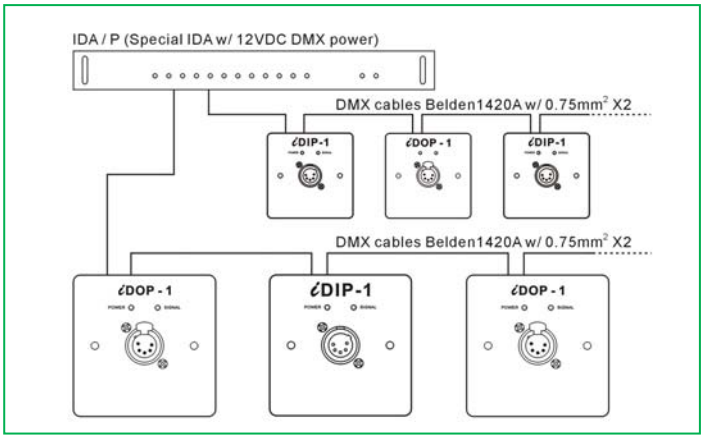

Macostar reserves the right to change the specification without prior notice
Macostar International Ltd: Match-iDOP- DATA - V1.2 – 27 Jun 2011